BYD Battery-Box HV
Extension of modules
Version 1.1

Important: The installation and all other kinds of works or measurements in combination with the Battery-Box HV are only allowed by professional electricians.

This manual describes how to add new modules to an existing BYD Battery-Box HV system.
Note: The SOC level of the new module and the the one of the existing battery system need to be on a similar level. During first commissioning the battery and inverter always show a predefined SOC of 19%. This is not the correct state of charge and the battery will correct the SOC at the first full charging cycle. The real SOC of new modules is approx. 35%, this is why extensions have to happen when the battery is close to 35%SOC.

Approach 1 (without charger):
1. You will get a module with a SOC of ~35% (standard at delivery)
2. Once the tower has a SOC of ~35%, please turn of the battery (tolerance 5%)
3. Add the new module to the tower, adjust module number in web interface and restart
4. the SOC values of the modules will equalize themselves over the next days

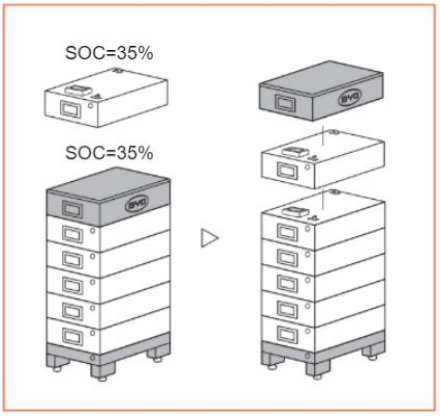

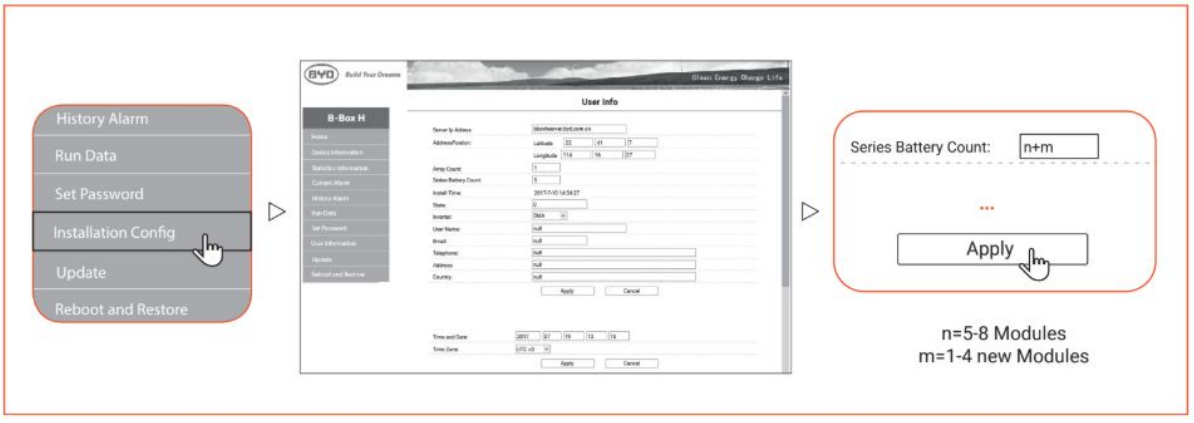

Approach 2 (with charger):

1. We send you a charger
2. Charge the new module to 100% SOC

   Please note: The green LED of the charger will blink during the charging process. The charger will stop automatically and the green LED will be constantly on one the charging process is finished.
3. Add the new module to the tower once the tower has 100%SOC
4. Adjust amount of modules in the web interface
5. Send the charger to the address we provide

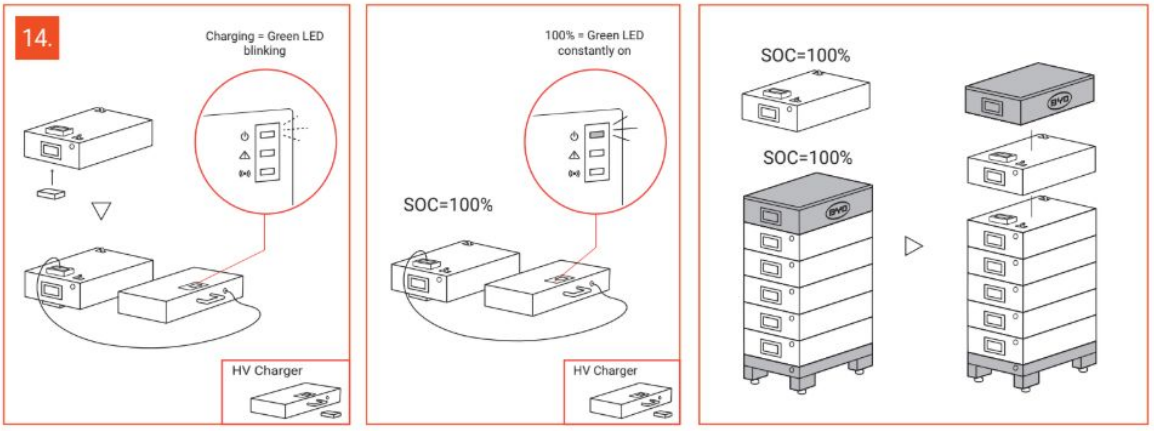

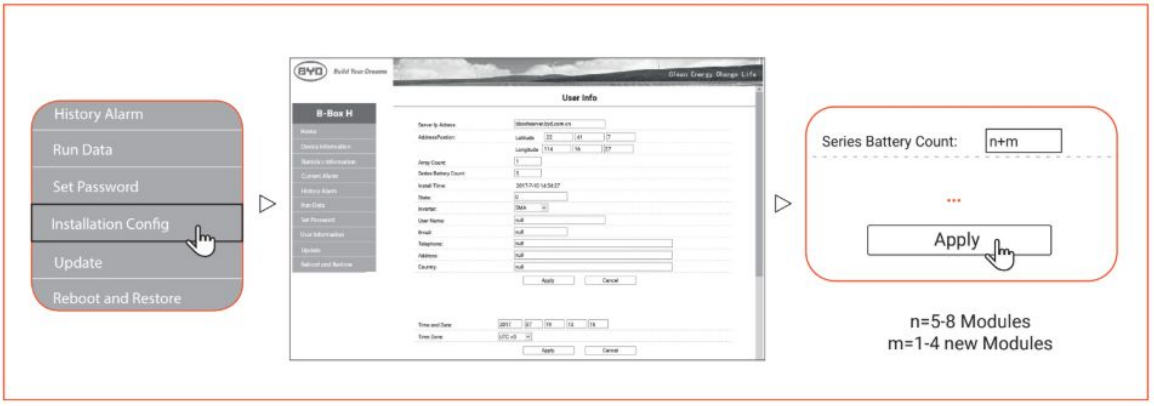

This manual is a shortened assistance for the Battery-Box High Voltage and does not replace the original manual, which can be found on www.eft-systems.de or www.byd.com. The installation must be carried out by a qualified expert. Attention, High Voltage Storage! Improper handling can cause danger and damage.